Woodwerx
odyssey

TECHNICAL DATA

CEILING GRILLE
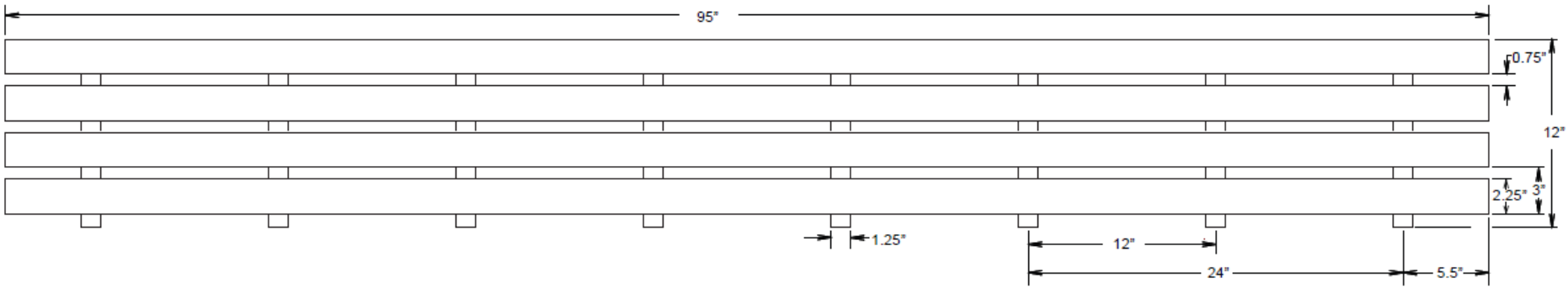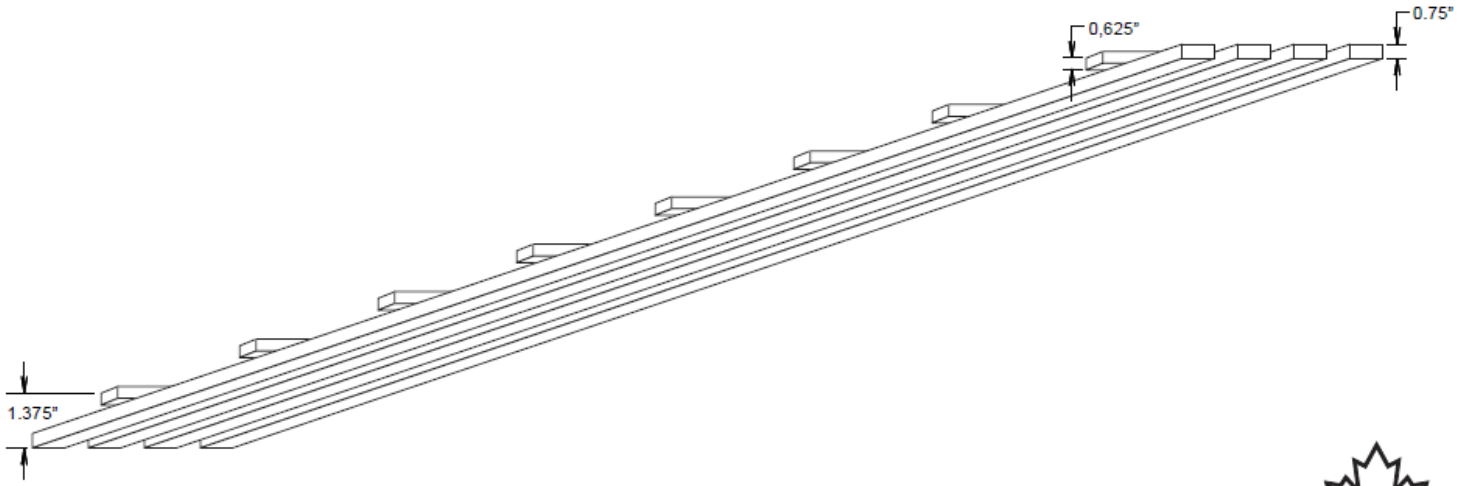
(4 x 2.25” horizontal slats)